LET	ALTERATION	DATE	BY	LET	ALTERATION	DATE	BY

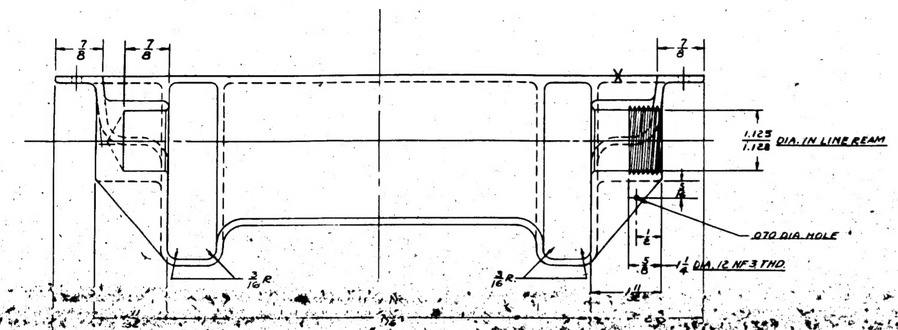

SECTION B-B

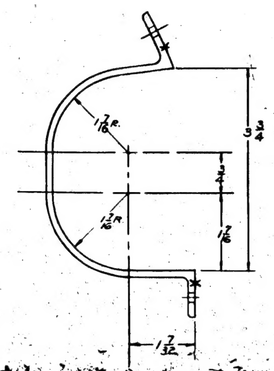

SECTION A-A

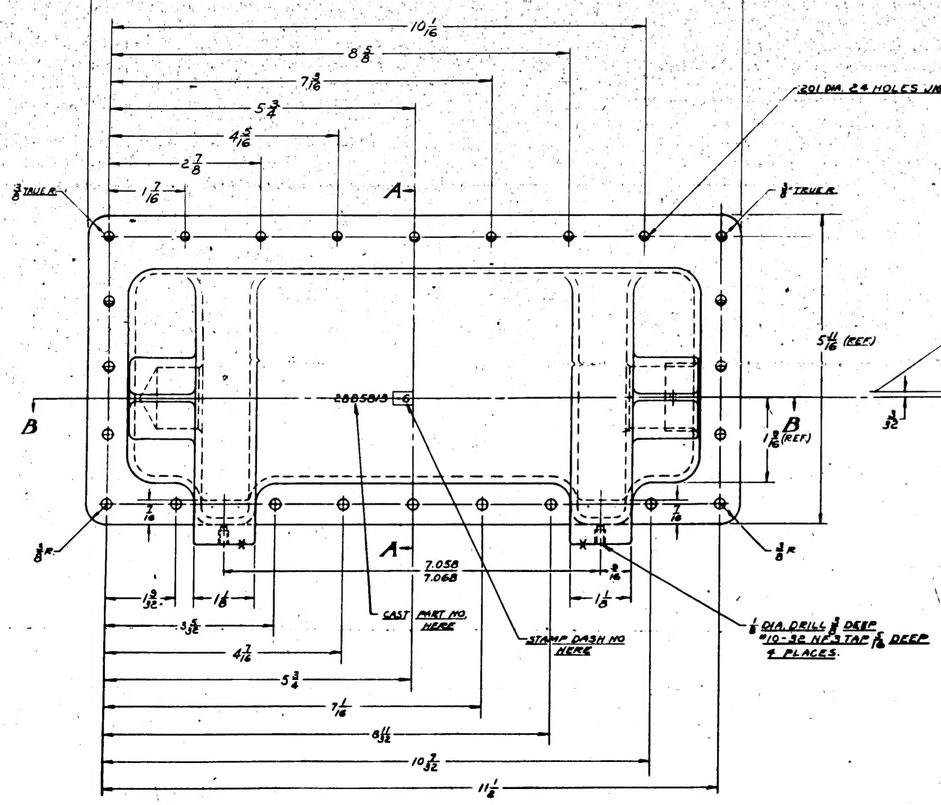

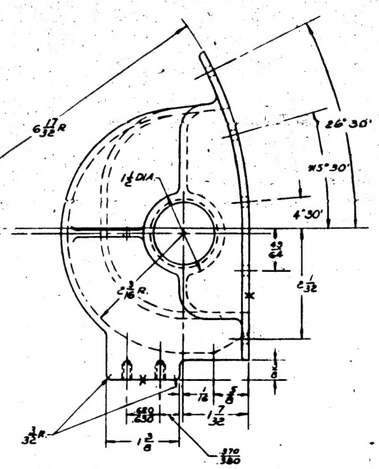

NOTES:

1. ALL FILLETS 1/8 R. UNLESS NOTED OTHERWISE.
2. ALL ROUNDED EDGES 1/16 R. UNLESS NOTED OTHER WISE.
3. ALL UNDIMENSIONED RADII 3/8
4. SURFACES INDICATED BY ASTERISK (*) ARE TO BE THE A CONVENTIONAL FINISH UNLESS CASTING IS MADE BY PERMANENT MOLD, INTOCK, VSHRINK OR EQUIVALENT PROCESS.
5. ALL WALLS 1/8 THICK

MCR #272-A1

APPROVED FOR TOOLING BY
Jones 9/11/48

-6	PAY-EA	28B5811	1						
PART NO.	MODEL	PART NAME	NO.						
ASSEMBLIES FOR AIRPLANE									
28B1801 & 28B1805		1.8							
DESIGNED BY		DWG. NO.							
LIST IS SUBJECT TO CHANGE WITHOUT NOTICE	SCALE 12" = 1'-0"	DWG. NO.							
STAMP PART NUMBER WHERE SHOWN									

PART NO.	STOCK	MATERIAL	SPEC.	LH DH REQ.	LH DH REQ.	LH DH REQ.	LH DH REQ.	LH DH REQ.	LH DH REQ.
	4	4 28B1801 & 28B1805 CASTING	AL. AL.	W-99-A-320					
	3	MAKE FROM ROUGH CASTING							
PARTS LIST FOR ASSY.				-0	-2	-3	-4	-5	

A.S.		DESIGN			
PART NONE	Z — P	9-1-48	9-1-48		
HEAT TREAT	FINISH	DRAWN	CHECK	STRUCT	MAT	APPROV	ENG

NAME HOUSING - BOMBER'S WINDOW SHUTTER OPERATING MECHANISM

GRP NONE

SIZE J 28B5813

H 167

R C10Ca97